Rating	16A 125VAC 10A 250VAC 10A 125VAC 6A 250VAC
Contact R	50m ohm Max.
Insulation R	DC 500V 100M ohm Min.
Dielectric Strength	AC 1500V 1 minute
Operation Temperature	-20°C~85°C
Circuit	2P SPST ON-OFF

Mount Hole

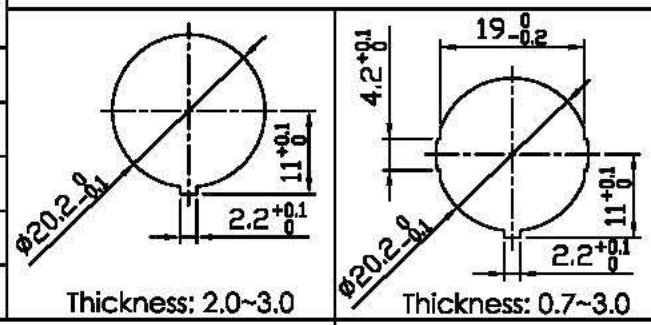

Circuit Structure

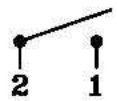

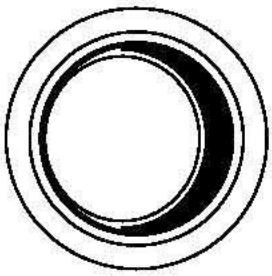

* Material
Frame: Nylon 66, Black
Actuator: Nylon 66,Black/RED
Printed: None

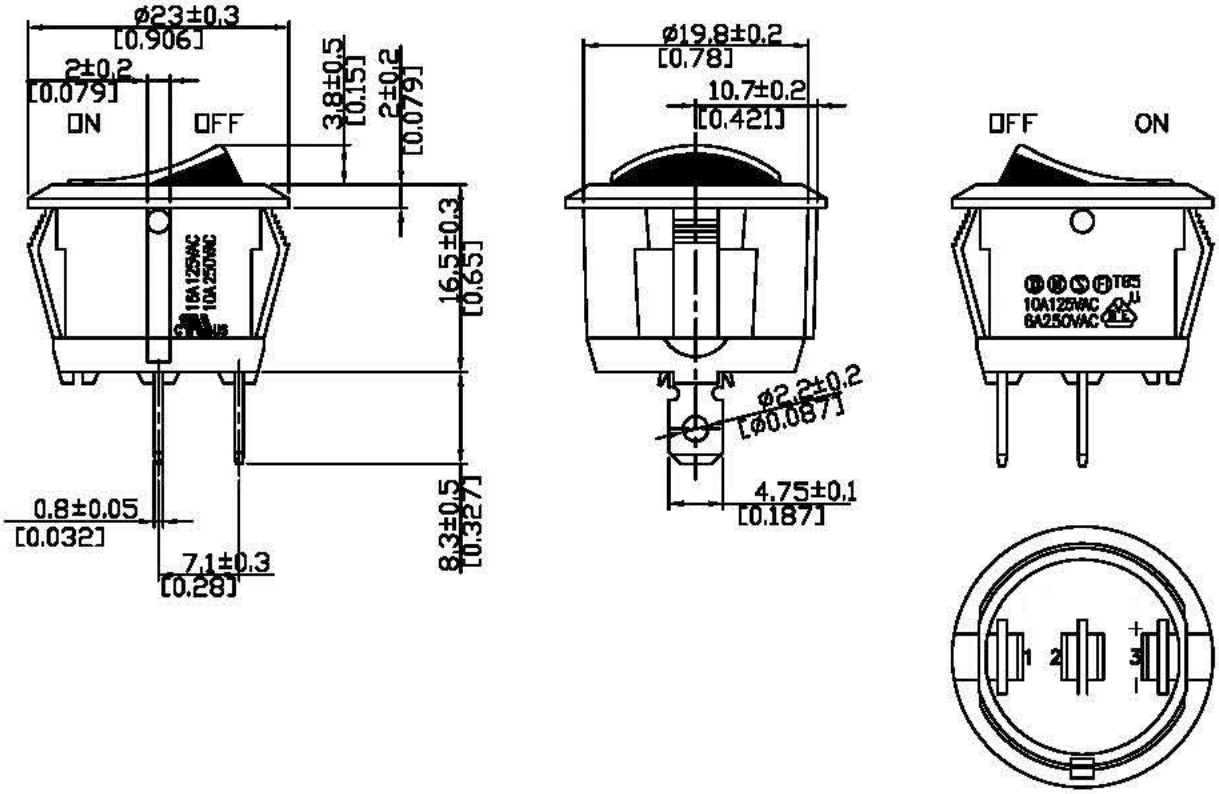

C8\DELCITY\7500066

							△
							△
Date	Name	Descriptions				REV. 1	NO
Drawing	Check	Approval			Model Name	ROCKER SWITCH	
			Customer No.	7500066			
07/14/'03	7/15/'03	7/15/'03	Unit	mm		DELCITY	