		Mount Hole	Circuit Structure
Rating	20A 12V DC	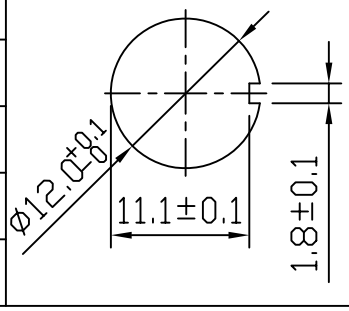	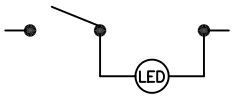
Contact R	50m ohm Max.		
Insulation R	DC 500V 100M ohm Min.		
Dielectric Strength	AC 1000V 1 minute		
Circuit	3P SPST ON-OFF		

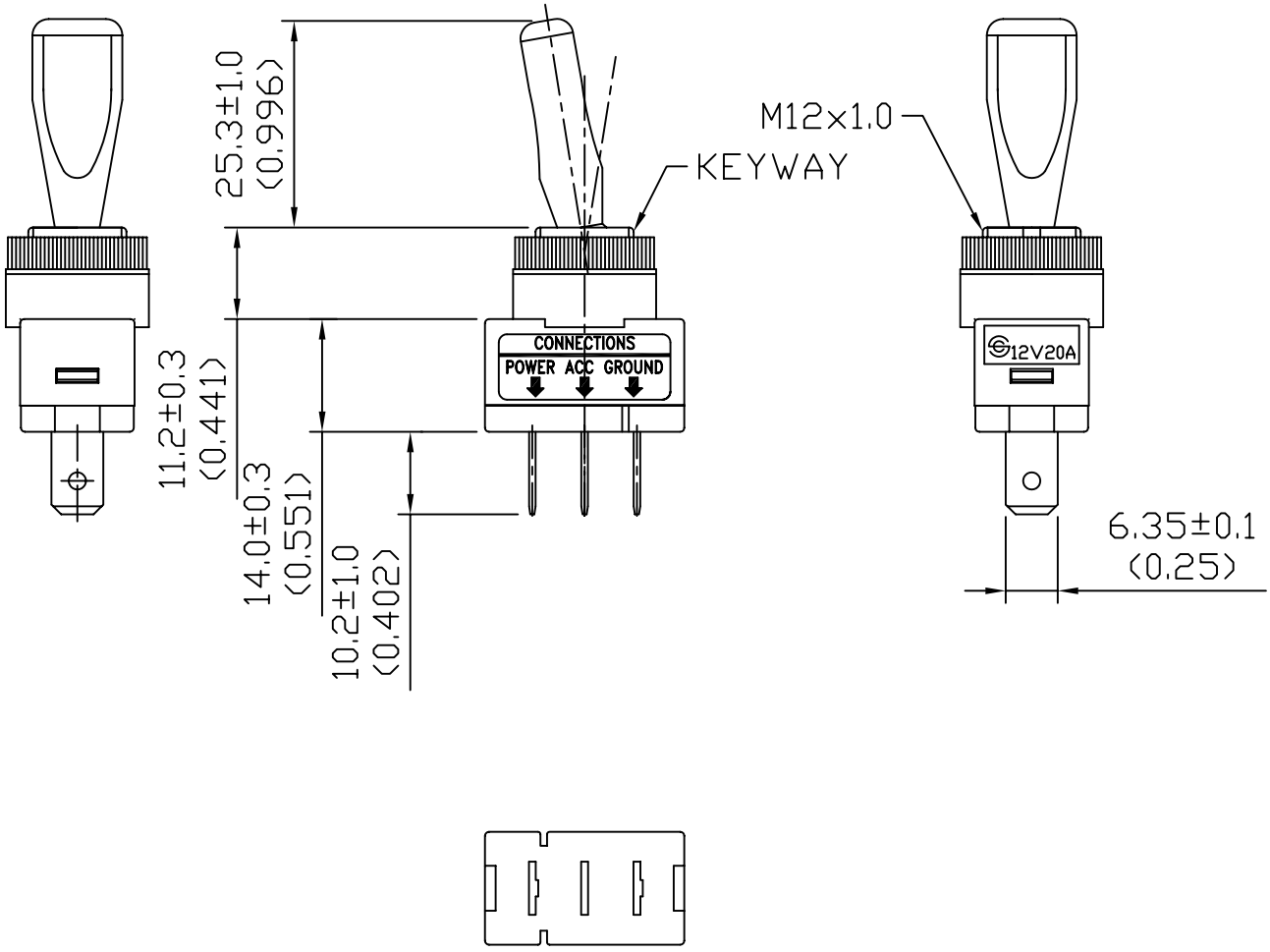

Unit	mm (inch)	DELCITY P/N	73180	REV.	1	DEL CITY